PAC INTERNATIONAL Inc.
Toll Free 866-774-2100 • Telephone 503-649-7700

WALL TO CEILING / FLOOR JUNCTION
STEEL STUD

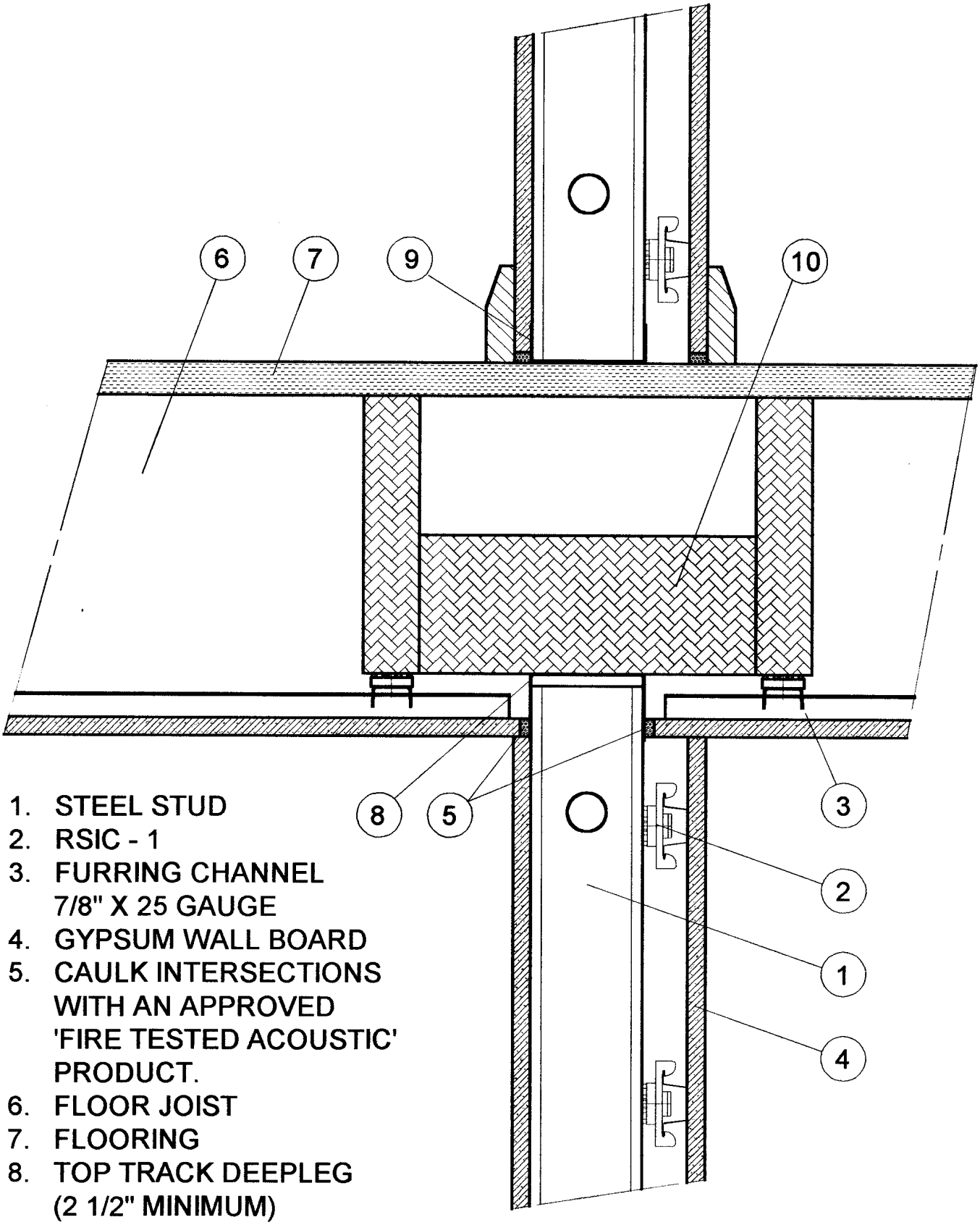

1. STEEL STUD
2. RSIC - 1
3. FURRING CHANNEL
   7/8" X 25 GAUGE
4. GYPSUM WALL BOARD
5. CAULK INTERSECTIONS
   WITH AN APPROVED
   'FIRE TESTED ACOUSTIC'
   PRODUCT.
6. FLOOR JOIST
7. FLOORING
8. TOP TRACK DEEPLEG
   (2 1/2" MINIMUM)
9. BOTTOM TRACK
10. TIMBER CROSS BRACE