Design No. M531

June 11, 2021

Unrestrained Assembly Rating — 1 Hr.

This design was evaluated using a load design method other than the Limit States Design Method (e.g., Working Stress Design Method). For jurisdictions employing the Limit States Design Method, such as Canada, a load restriction factor shall be used — See Guide BXUV or BXUV7

*** Indicates such products shall bear the UL or cUL Certification Mark for jurisdictions employing the UL or cUL Certification (such as Canada), respectively.**

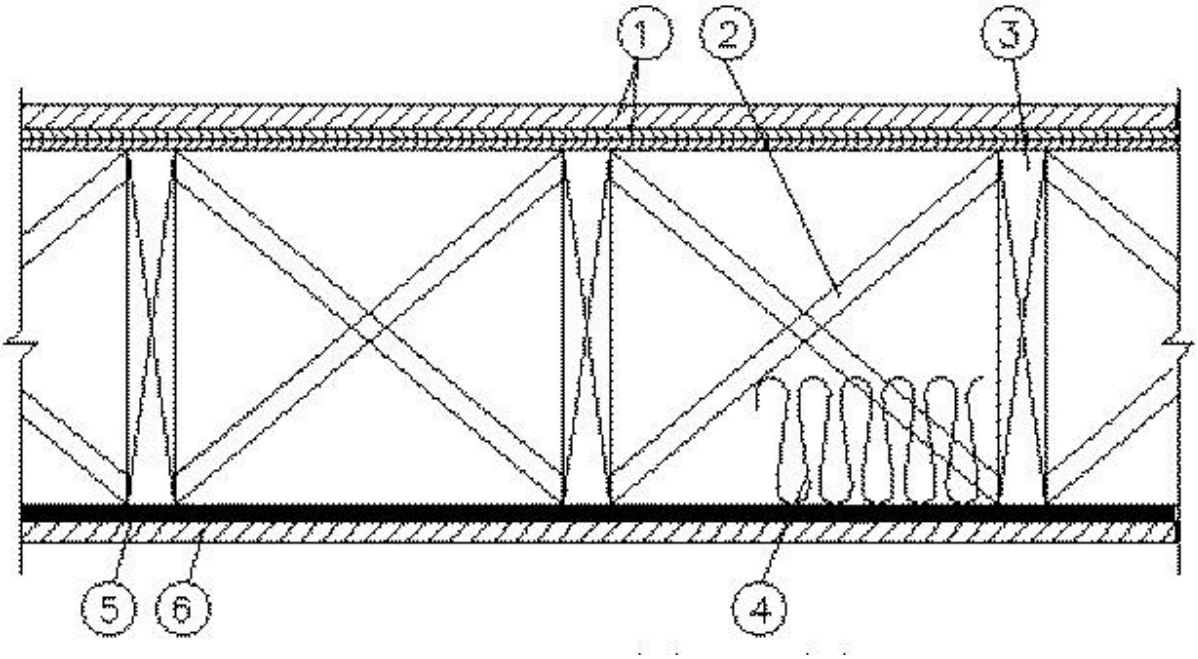

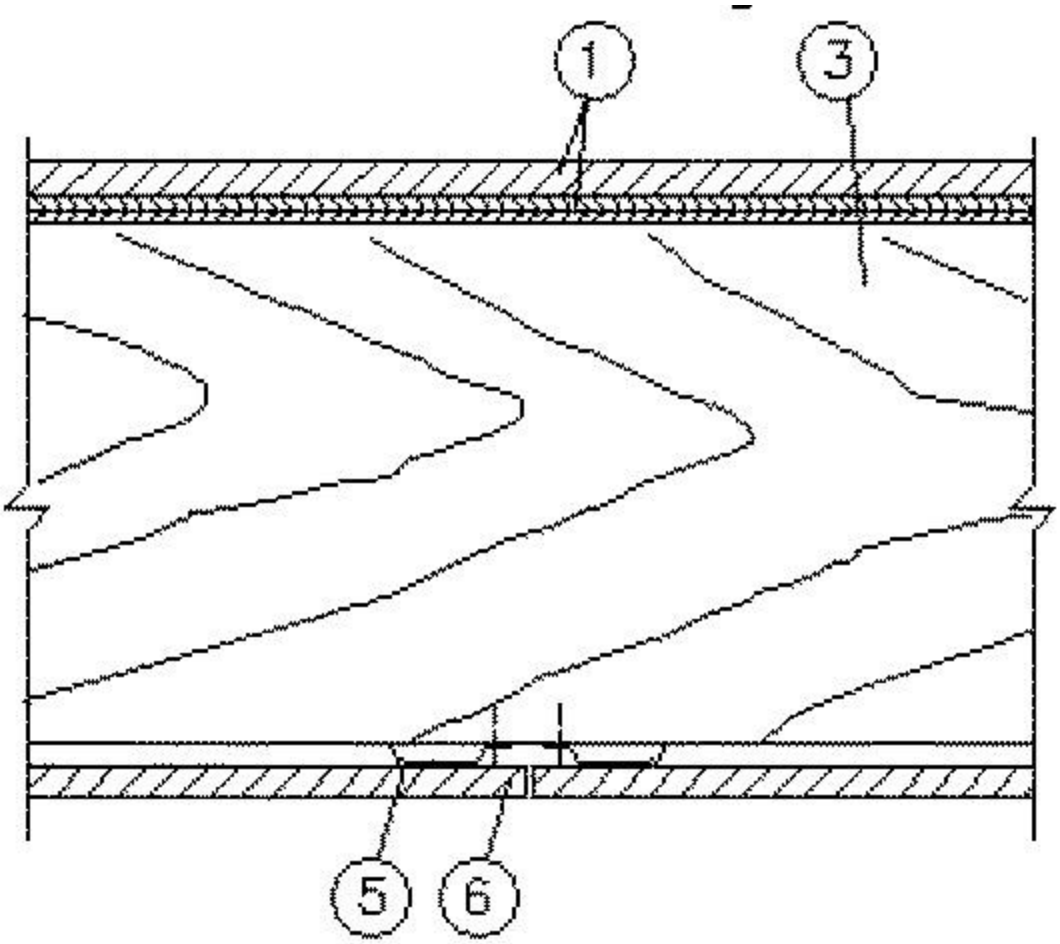

1. **Flooring System —** The flooring system shall consist of one of the following:

System No. 1

Subflooring — Nom 15/32 in. thick wood structural panels installed perpendicular to the joists with end joints staggered. Plywood or panels secured to joists with construction adhesive and No. 6d ringed shank nails, spaced 12 in. OC along each joist. Staples having equal or greater withdrawal and lateral resistance strength may be substituted for the 6d nails.

Vapor Barrier — (Optional) — Nom 0.030 in. thick commercial asphalt saturated felt.

Finish Floor — Min 1 by 4 in. T & G lumber installed perpendicular to the joists, or min 15/32 in. thick wood structural panels, min grade "Underlayment" or "Single-Floor". Face grain of plywood or strength axis of panel to be perpendicular to joists with joints staggered.

System No. 2

Subflooring — Nom 15/32 in. thick wood structural panels installed perpendicular to the joists with end joints staggered. Plywood or panels secured to joists with construction adhesive and No. 6d ringed shank nails, spaced 12 in. OC along each joist. Staples having equal or greater withdrawal and lateral resistance strength may be substituted for the 6d nails.

Vapor Barrier — (Optional) — Nom 0.010 in. thick commercial asphalt saturated felt.

Finish Flooring — Floor Topping Mixture* — Min 3/4 in. thickness of floor topping mixture having a minimum compressive strength of 1800 psi. Refer to manufacturer's instructions accompanying the material for specific mix design.

UNITED STATES GYPSUM CO — Types LRK, HSLRK, CSD

USG MEXICO S A DE C V — Types LRK, HSLRK, CSD

Floor Mat Materials* — (Optional) — Floor mat material loose laid over the subfloor. Refer to manufacturer's instructions regarding the minimum thickness of floor topping over each floor mat material.

UNITED STATES GYPSUM CO — Types SAM, LEVELROCK® Brand Sound Reduction Board, LEVELROCK® Brand Floor Underlayment SRM-25

Alternate Floor Mat Materials* — (Optional) — Nom 3/8 in. thick floor mat material loosely laid over the subfloor.

GRASSWORX L L C — Type SC50

Alternate Floor Mat Material* — (Optional) — Floor mat material nominal 3/8 in. thick loose laid over the subfloor. Floor topping shall be a min 1/2 in. thick.

System No. 3

Subflooring — Min 15/32 in. thick wood structural panels, min grade "C-D" or "Sheathing". Face grain of plywood or strength axis of panels to be perpendicular to the joists with joints staggered.

Vapor Barrier — (Optional) — Commercial asphalt saturated felt, 0.030 in. thick.

Vapor Barrier — (Optional) — Nom 0.010 in. thick commercial rosin-sized building paper.

Finish Flooring* — Min 3/4 in. thickness of any Floor Topping Mixture bearing the UL Classification Marking as to Fire Resistance. See Floor- and Roof-Topping Mixtures (CCOX) category for names of Classified Companies.

Floor Mat Materials* — (Optional) — Nom. 1/4 in. thick loose laid over the subfloor. Floor topping thickness shall be a minimum of 3/4 in.

KEENE BUILDING PRODUCTS CO INC — Type Quiet Qurl 55/025 and Quiet Qurl 55/025 N

Alternate Floor Mat Materials* — (Optional) — Floor mat material Nom. 3/8 in. thick loose laid over the subfloor. Floor topping thickness shall be a minimum of 1 in.

KEENE BUILDING PRODUCTS CO INC — Type Quiet Qurl 60/040 and Quiet Qurl 60/040 N

Alternate Floor Mat Materials* — (Optional) — Floor mat material Nom. 3/4 in. thick loose laid over the subfloor. Floor topping thickness shall be a minimum of 1-1/2 in.

KEENE BUILDING PRODUCTS CO INC — Type Quiet Qurl 65/075, Quiet Qurl 65/075 N

Alternate Floor Mat Materials* — (Optional) — Floor mat material Nom. 1/8 in. thick loose laid over the subfloor. Floor topping thickness shall be a minimum of 3/4 in.

KEENE BUILDING PRODUCTS CO INC — Type Quiet Qurl 52/013 and Quiet Qurl 52/013 N

Alternate Floor Mat Materials* — (Optional) — Floor mat material Nom. 1/4 in. entangled net core with a compressible fabric attached to the bottom loose laid over the subfloor. Floor topping thickness shall be a minimum of 1 in.

KEENE BUILDING PRODUCTS CO INC — Quiet Qurl 55/025 MT and Quiet Qurl 55/025 N MT

System No. 4

Subflooring — Nom 15/32 in. thick wood structural panels installed perpendicular to the joists with end joints staggered. Plywood or panels secured to joists with construction adhesive and No. 6d ringed shank nails, spaced 12 in. OC along each joist. Staples having equal or greater withdrawal and lateral resistance strength may be substituted for the 6d nails.

Vapor Barrier — (Optional) — Nom 0.030 in thick commercial asphalt saturated felt.

Finish Flooring — Floor Topping Mixture* — Min 3/4 in. thickness of floor topping mixture having a min compressive strength of 1500 psi. Refer to manufacturer's instructions accompanying the material for specific mix design.
MAXXON CORP — Type Maxxon Standard and Maxxon High Strength

Floor Mat Materials* — (Optional) — Floor mat material loose laid over the subfloor. Refer to manufacturer's instructions regarding the minimum thickness of floor topping over each floor mat material.
MAXXON CORP — Type Encapsulated Sound Mat.

Floor Mat Reinforcement — (Optional) - Refer to manufacturer's instructions regarding minimum thickness of floor topping for use with floor mat reinforcement.

Metal Lath — (Optional) — 3/8 in. expanded galvanized steel diamond mesh, 3.4 lbs/sq yd loose laid over the floor mat material.

Fiber Glass Reinforcement — (Optional) 0.015 in. thick PVC coated non-woven fiberglass mesh, 0.368 lbs./sq. yd loose laid over the floor mat material.

System No. 5

Subflooring — Nom 15/32 in. thick wood structural panels installed perpendicular to the joists with end joints staggered. Plywood or panels secured to joists with construction adhesive and No. 6d ringed shank nails, spaced 12 in. OC along each joist. Staples having equal or greater withdrawal and lateral resistance strength may be substituted for the 6d nails.

Vapor Barrier — (Optional) Nom 0.010 in. thick commercial asphalt saturated felt.

Finish Flooring — Floor Topping Mixture* — Min 3/4 in. thickness of floor topping mixture having a minimum compressive strength of 1500 psi. Refer to manufacturer's instructions accompanying the material for specific mix design.
FORMULATED MATERIALS LLC — Types FR-25, FR-30, and SiteMix

Floor Mat Materials* — (Optional) Floor mat material loose laid over the subfloor. Refer to manufacturer's instructions regarding the minimum thickness of floor topping over each floor mat material.
FORMULATED MATERIALS LLC — Types M1, M2, M3, Elite, Duo, R1, and R2

System No. 6

Structural Cement-Fiber Units* — Nom 3/4 in. thick, with long edges tongue and grooved. Long dimension of panels to be perpendicular to wood trusses with end joints staggered a min of 2 ft and centered over the trusses. Panels secured to wood trusses with 1-5/8 in. long, No. 8, self-countersinking wood screw spaced a max of 12 in. OC in the field with a screw located 1 in. and 2 in. from each edge, and 8 in. OC on the perimeter with a screw located 2 in. from each edge, located 1/2 in. from the end edges of the panel.
UNITED STATES GYPSUM CO — Types STRUCTO-CRETE, USGSP

Finish Flooring - Floor Topping Mixture* — Min 3/4 in. thickness of floor topping mixture having a minimum compressive strength of 1800 psi. Refer to manufacturer's instructions accompanying the material for specific mix design.
UNITED STATES GYPSUM CO — Types LRK, HSLRK, CSD

USG MEXICO S A DE C V — Types LRK, HSLRK, CSD

Floor Mat Materials* — (Optional) — Floor mat material loose laid over the subfloor. Refer to manufacturer\'s instructions regarding the minimum thickness of floor topping over each floor mat material.
UNITED STATES GYPSUM CO — Types SAM, LEVELROCK® Brand Sound Reduction Board, LEVELROCK® Brand Floor Underlayment SRM-25

System No. 7

Sub-flooring — Min 19/32 in. thick wood structural panels, min grade "C-D" or "Sheathing". Face grain of plywood or strength axis of panel to be perpendicular to joists with joints staggered.

Floor Mat Materials* — (Optional) — Floor mat material nom 1/8 in. (3 mm) thick loose laid over the subfloor. Floor topping thickness shall be a min of 3/4 in. (19 mm)
HACKER INDUSTRIES INC — FIRM-FILL SCM 125

Alternate Floor Mat Materials — (Optional) — Floor mat material nom 1/4 in. (6 mm) thick loose laid over the subfloor. Floor topping thickness shall be a min of 1 in. (25 mm)
HACKER INDUSTRIES INC — Type FIRM-FILL SCM 250

Alternate Floor Mat Materials — (Optional) — Floor mat material nom 3/8 in. (10 mm) thick loose laid over the subfloor. Floor topping thickness shall be a min of 1-1/4 in. (32 mm)
HACKER INDUSTRIES INC — FIRM-FILL SCM 400

Alternate Floor Mat Materials — (Optional) — Floor mat material nom 3/4 in. (19 mm) thick loose laid over the subfloor. Floor topping thickness shall be a min of 1-1/2 in. (38 mm)
HACKER INDUSTRIES INC — Type FIRM-FILL SCM 750

Alternate Floor Mat Materials — (Optional) — Floor mat material nom 5/64 in. (2 mm) thick adhered to subfloor with Hacker Floor Primer. Primer to be applied to the surface of the mat prior to the placement of floor-topping mixture. Floor topping thickness a min 1 in. over the floor mat.
HACKER INDUSTRIES INC — Type Hacker Sound-Mat. (HSM1.02)

Alternate Floor Mat Materials — (Optional) — Floor mat material nom 1/4 in. (6 mm) thick adhered to subfloor with Hacker Floor Primer. Primer to be applied to the surface of the mat prior to the placement of a min 1-1/4 in. (32 mm) of floor-topping mixture.
HACKER INDUSTRIES INC — Type Hacker Sound-Mat II. (HSM2.06)

Metal Lath — (Optional) — For use with 3/8 in. (10 mm) or greater floor mat materials, 3/8 in. expanded steel diamond mesh, 3.4 lbs/sq yd placed over the floor mat material. Hacker Floor Primer to be applied prior to the placement of the metal lath. When metal lath is used, floor topping thickness a nom 1-1/4 in. over the floor mat.

Finish Flooring — Floor Topping Mixture* — Min 3/4 in. thickness of floor topping mixture having a min compressive strength of 1100 psi. Mixture shall consist of 6.8 gal of water to 80 lbs of floor topping mixture to 1.9 cu ft of sand.

HACKER INDUSTRIES INC — Firm-Fill Gypsum Concrete, Firm-Fill 2010, Firm-Fill 3310, Firm-Fill 4010, Firm-Fill High Strength, Gyp-Span Radiant

System No. 8

Subflooring — Nom 15/32 in. thick wood structural panels installed perpendicular to the joists with end joints staggered. Plywood or panels secured to joists with construction adhesive and No. 6d ringed shank nails, spaced 12 in. OC along each joist. Staples having equal or greater withdrawal and lateral resistance strength may be substituted for the 6d nails.

Vapor Barrier — (Optional) - Commercial asphalt saturated felt, 0.030 in. thick.

Vapor Barrier — (Optional) - Nom 0.010 in. thick commercial rosin-sized building paper.

Finish Flooring - Floor Topping Mixture* — Min 3/4 in. thickness of any Floor Topping Mixture bearing the UL Classification Marking as to Fire Resistance. See Floor- and Roof-Topping Mixtures (CCOX) category for names of Classified Companies.

Floor Mat Materials* — (Optional, Not Shown) - Floor mat material loose laid over the subfloor. Refer to manufacturer's instructions regarding the minimum thickness of floor topping over each floor mat material.
LOW & BONAR INC — EnkaSonic® by Colbond a member of the Low & Bonar group Types 125, 250, 250 Plus, 400, 400 Plus, 750 and 750 Plus.

Floor Mat Reinforcement — (Optional) - Refer to manufacturer's instructions regarding minimum thickness of floor topping for use with floor mat reinforcement.

Metal Lath — (Optional) — Expanded steel diamond mesh, 2.5 lb / sq yd loose laid over floor mat material.

Fiberglass Mesh Reinforcement — (Optional) — Coated non-woven glass fiber mesh grid loose laid over floor mat material.

2. **Cross Bridging —** 1 by 3 in.

3. **Wood Joists —** 2 by 10 in., spaced 16 in. OC, firestopped. Spacing may be increased to 24 in. OC when Item 7, Battens, are used.

4. **Batts and Blankets* —** (Optional) — Glass fiber or mineral wool insulation bearing the UL Classification Marking as to Surface Burning Characteristics and/or Fire Resistance. When the resilient channels (Item 5) or furring channels (Item 5B) are spaced 16 in. OC, the insulation shall be a max of 3-1/2 in. thick, and shall be secured against the subflooring with staples at 12 in. OC or held suspended in the concealed space with 0.090 in. diam galv steel wires attached to the wood trusses at 12 in. OC. When the resilient channels (Item 5) or furring channels (Item 5B) are spaced a max of 12 in. OC or when the Steel Framing Members (Item 5A) are used, there is no limit in the overall thickness of insulation, and the insulation can be secured against the subflooring, held suspended in the concealed space or draped over the resilient channels (or Steel Framing Members) and gypsum panel membrane.

4A. **Loose Fill Material* —** As an alternate to Item 5, when the resilient channels (Item 5) or furring channels (Item 5B) are spaced a max of 12 in. OC or when the Steel Framing Members (Item 5A) are used - Any loose fill material bearing the UL Classification Marking for Surface Burning Characteristics. There is no limit in the overall thickness of insulation.

5. **Furring Channels —** Resilient channels formed of 25 MSG thick galv steel. Installed perpendicular to the wood joists, spaced a max of 24 in. OC when no insulation is fitted in the concealed space. Otherwise, the spacing shall be as specified under Item 4 or 4A. Two courses of resilient channel positioned 6 in. OC at gypsum panel butt-joints (3 in. from each end of panel). Channels oriented opposite at panel butt-joints. Channel splices overlapped 4 in. beneath wood trusses. Channels secured to each truss with 1-1/4 in. long Type S screws.

5A. **Alternate Steel Framing Members —** (Not Shown) — As an alternate to Item 5, main runners, cross tees, cross channels and wall angle as listed below.
a. **Main Runners —** Nom 10 or 12 ft long, 15/16 in. or 1-1/2 in. wide face, spaced 4 ft. OC. Main runners suspended by min 12 SWG galv steel hanger wires spaced 48 in. OC. Hanger wires to be located adjacent to main runner/cross tee intersections. Hanger wires wrapped and twist-tied on 16d nails driven in to side of joists at least 5 in. above the bottom face.

b. **Cross Tees —** Nom 4 ft long, 1-1/2 in. wide face, installed perpendicular to the main runners, spaced 16 in. OC. Additional cross tees or cross channels used at 8 in. from each side of butted gypsum panel end joints. The cross tees or cross channels may be riveted or screw attached to the wall angle or channel to facilitate the ceiling installation.

c. **Cross Channels —** Nom 4 or 12 ft long, installed perpendicular to main runners, spaced 16 in. OC.

d. **Wall Angle or Channel —** Painted or galv steel angle with 1 in. legs or channel with 1 in. legs, 1-9/16 in. deep attached to walls at perimeter of ceiling with fasteners 16 in. OC. To support steel framing member ends and for screw-attachment of the gypsum panels.
USG INTERIORS LLC — Type DGL or RX

5B. **Alternate Steel Framing Members* —** (Not Shown) — As an alternate to Items 5 and 5A, furring channels and Steel Framing Members as described below.
a. **Furring Channels —** Formed of No. 25 MSG galv steel. 2-9/16 in. or 2-23/32 in. wide by 7/8 in. deep, installed perpendicular to the wood joists, spaced a max of 24 in. OC when no insulation is fitted in the concealed space. Otherwise, the spacing shall be as specified under Item 4 or 4A. Channels secured to joists as described in Item b. Ends of adjoining channels overlapped 6 in. and tied together with double strand of No. 18 SWG galv steel wire near each end of overlap.

b. **Steel Framing Members* —** Used to attach furring channels (Item a) to the wood joists (Item 2). RSIC-1 and RSIC-1 (2.75) clips secured to consecutive joists with No. 8 x 2-1/2 in. coarse drywall screw through the center grommet. RSIC-Si-X secured with No. 10 x 3-1/2 in. screws. RSIC-V and RSIC-V (2.75) clips secured to consecutive joists with No. 8 x 1-1/2 in. coarse drywall screw through the center hole. Furring channels are friction-fitted into clips. RSIC-1, RSIC-Si-X, and RSIC-V clips for use with 2-9/16 in. wide furring channels. RSIC-1 (2.75) and RSIC-V (2.75) clips for use with 2-23/32 in. wide furring channels. Adjoining channels are overlapped as described in Item a. As an alternate, ends of adjoining channels may be overlapped 6 in. and secured together with two self-tapping No. 6 framing screws, min. 7/16 in. long at the midpoint of the overlap, with one screw on each flange of the channel. Additional clips required to hold furring channel that supports the gypsum panel butt joints, as described in Item 8.
PAC INTERNATIONAL L L C — Types RSIC-1, RSIC-V, RSIC-Si-X, RSIC-1 (2.75), RSIC-V (2.75)

5C. **Alternate Steel Framing Members* —** (Not Shown) — As an alternate to Items 5 and 5A, furring channels and Steel Framing Members as described below.
a. **Furring Channels —** Formed of No. 25 MSG galv steel. 2-3/8 in. wide by 7/8 in. deep, installed perpendicular to the wood joists, spaced a max of 24 in. OC when no insulation is fitted in the concealed space. When batt insulation (Items 4) is draped over the resilient channel/gypsum board ceiling membrane, the resilient channel spacing shall be reduced to 12 in. OC. Channels secured to joists as described in Item b. Ends of adjoining channels overlapped 6 in. and tied together with double strand of No. 18 SWG galv steel wire near each end of overlap.

b. **Steel Framing Members* —** Used to attach furring channels (Item a) to the wood joists (Item 2). GenieClips secured to consecutive joists with No. 8 x 2-1/2 in. coarse drywall screw through the center grommet. When insulation, Items 4, is applied over the furring channel/gypsum panel ceiling membrane, the clip spacing shall be reduced to 24 in. OC and secured to consecutive joists. Furring channels are friction-fitted into clips. Adjoining channels are overlapped as described in Item a. As an alternate, ends of adjoining channels may be overlapped 6 in. and secured together with two self-

tapping No. 6 framing screws, min. 7/16 in. long at the midpoint of the overlap, with one screw on each flange of the channel. Additional clips required to hold furring channel that supports the gypsum panel butt joints, as described in Item 6. Not evaluated for use with Item 4A.
PLITEQ INC — Type GENIECLIP

5D. **Alternate Steel Framing Members* —** (Not Shown) — As an alternate to Items 5-5C, furring channels and Steel Framing Members as described below.
a. **Furring Channels —** Formed of No. 25 MSG galv steel, 2-5/8 in. wide by 7/8 in deep, spaced 24 in OC, perpendicular to joists. When batt insulation (Item 4) is draped over the resilient channel/gypsum board ceiling membrane, the resilient channel spacing shall be reduced to 12 in. OC Channels secured to joists as described in Item b.

b. **Steel Framing Members* —** Used to attach furring channels (Item a) to the wood joists (Item 2). Clips spaced at 48" OC and secured to the bottom of the joists with one 2 in. Coarse Drywall Screw with 1 in. diam washer through the center hole. Furring channels are then friction fitted into clips. Ends of channels are overlapped 6" and tied together with double strand of No. 18 AWG galvanized steel wire. Additional clips are required to hold the Gypsum Butt joints as described in item 6.
STUDCO BUILDING SYSTEMS — RESILMOUNT Sound Isolation Clips - Type A237 or A237R

5E. **Steel Framing Members* —** (Optional, Not Shown) — As an alternate to Item 5.
a. **Furring Channels —** Formed of No. 25 MSG galv steel, nominal 2-1/2 in. wide by 7/8 in. deep, spaced as indicated in Item 5, perpendicular to the joists. Channels secured to Cold Rolled Channels at every intersection with a 3/4 in. TEK screw through each furring channel leg. Ends of adjoining channels overlapped 12 in. and fastened together with two double strand No. 18 SWG galv steel wire ties, one at each end of overlap, or with two 3/4 in. TEK screws in each leg of the overlap section. Two furring channels used at end joints of gypsum board (Item 6), each extending a min of 6 in. beyond both side edges of the board.

b. **Cold Rolled Channels —** 1-1/2 in. by 1/2 in., formed from No. 16 ga. galv steel, positioned vertically and parallel to joists, friction-fitted into the channel caddy on the Steel Framing Members (Item 5Ec) and secured with two 3/4 in. TEK screws. Adjoining lengths of cold rolled channels lapped min. 12 in. and secured along bottom legs with four 3/4 in. TEK screws and wire-tied together with two double strand 18 SWG galv steel wire ties, one at each end of overlap.

c. **Steel Framing Members* —** Spaced 48 in. OC. max along joist, and secured to the joist on alternating joists with two, #10 x 1-1/2 in. screws through mounting holes on the hanger bracket.
PAC INTERNATIONAL L L C — Type RSIC-SI-CRC EZ Clip

5F. **Steel Framing Members* —** (Optional, Not Shown) — As an alternate to Item 5.
a. **Furring Channels —** Formed of No. 25 MSG galv steel, nominal 2-1/2 in. wide by 7/8 in. deep, spaced as indicated in Item 5, perpendicular to joists and friction fit into Steel Framing Members (Item 5Fb). Ends of adjoining channels overlapped 6 in. and tied together with double strand of No. 18 SWG galv steel wire near each end of overlap or with two TEK screws along each leg of the 6 in. overlap. Two furring channels used at end joints of gypsum board (Item 6). Butt joint channels held in place by strong back channels placed upside down, on top of, and running perpendicular to primary furring channels, extending 6 in. longer than length of gypsum side joint. Strong back channels spaced maximum 48 in. OC. Strong back channels secured to every intersection of primary furring channels with four 7/16 in. pan head screws, two along each of the legs at intersections. Butt

joint channels run perpendicular to strong back channels and shall be minimum 6 in. longer than length of joint, secured to strong back channels with 7/16 in. pan head screws, two along each of the legs at intersection with strong back channels.

b. **Steel Framing Members* —** Used to attach furring channels (Item 5Fa) to joists. Clips spaced 48 in. OC and secured along joist webs at each furring channel intersection with min. 3/4 in. long self-drilling #10 x 1-1/2 in. screws through each of the provided hole locations. Furring channels are friction fitted into clips.
PAC INTERNATIONAL L L C — Type RSIC-S1-1 Ultra

5G. **Steel Framing Members* —** (Optional, Not Shown) — Used as an alternate method to attach resilient channels to structural members. A resilient sound isolation accessory shall be used at each attachment point of the resilient channels and spaced max 16 in. O.C. Channel ends butted and centered under the structural members and attached with one accessory at each end. Additional accessories used to hold resilient channels that support the gypsum board end joints. The accessory envelops the mounting edge of the resilient channel. The accessory and resilient channel are fastened to the structural members with the screws supplied with the accessory and per the accessory manufacturer's installation instructions. Gypsum Board butt joints staggered minimum 24 in. OC and Gypsum Board screws spaced 8 in. OC (in lieu of 12 in.) when used.
PAC INTERNATIONAL L L C — Type RC-1 Boost

6. **Gypsum Board* —** Nom 5/8 in. thick, 48 in. wide gypsum panels. When resilient channels (Items 5) are used, gypsum panels installed with long dimension perpendicular to resilient channels. Gypsum panels secured with 1 in. long Type S bugle head steel screws spaced 12 in. OC and located a min of 1/2 in. from side joints and 3 in. from end joints. End joints secured to both resilient channels as shown in end joint detail. When Steel Framing Members (Item 5B, 5C) are used, gypsum panels installed with long dimensions perpendicular to furring channels. Panels attached to the furring channels using 1 in. long Type S bugle-head steel screws spaced 8 in. OC along butted end joints and in the field of the panels. Butted end joints shall be staggered min. 2 ft within the assembly, and occur midway between the continuous furring channels. Each end of each gypsum panel shall be supported by a single length of furring channel equal to the width of the gypsum panel plus 6 in. on each end. The two support furring channels shall be spaced approximately 3-1/2 in. OC, and be attached to underside of the joist with one clip at each end of the channel. When Steel Framing Members (Item 5A) are used, gypsum panels installed with long dimension perpendicular to cross tees with side joints centered along main runners and end joints centered along cross tees. Panels fastened to cross tees with 1 in. long Type S bugle-head steel screws spaced 8 in. OC in the field and 8 in. OC along end joints. Panels fastened to main runners with 1 in. long Type S bugle-head steel screws spaced midway between cross tees. Screws along sides and ends of panels spaced 3/8 to 1/2 in. from panel edge. End joints of panels staggered on adjacent panels not less than 12 in. When **Steel Framing Members** (Item 5D) are used, one layer of nom 5/8 in. thick, 4 ft wide gypsum board is installed with long dimensions perpendicular to furring channels. Gypsum board secured to furring channels with nom 1 in. long Type S bugle-head steel screws spaced 8 in. OC in the field of the board. Gypsum board butted end joints shall be staggered minimum 48 in. and centered over main furring channels. At the gypsum board butt joints, each end of each gypsum board shall be supported by a single length of furring channel equal to the width of the gypsum board plus 3 in. on each end. The two support furring channels shall be spaced approximately 3 in. in from joint. Screw spacing along the gypsum board butt joint and along both additional channels shall be 8 in. OC.

Additional screws shall be placed in the adjacent section of gypsum board into the aforementioned 3 in. extension of the extra butt joint channels as well as into the main channel that runs between. Butt joint furring channels shall be attached with one RESILMOUNT Sound Isolation Clip at each end of the channel.
When **Steel Framing Members** (Item 5E) are used, nom 5/8 in. thick, 4 ft wide gypsum board, installed as described in Item 6. Adjacent butt joints staggered minimum 48 in. OC.

When **Steel Framing Members** (Item 5F) are used, nom 5/8 in. thick, 4 ft wide gypsum board, installed as described in Item 6. Butt joints staggered minimum 24 in. OC.

AMERICAN GYPSUM CO — Type AG-C

7. **Battens —** Nom 6 by 22-1/2 by 5/8 in. thick pieces of gypsum board (Item 6) centered under subfloor joints and fastened with staples spaced 7 in. OC along each edge. Staples formed of 16 SWG (0.062 in. thick) steel with 1-1/8 in. legs and 1/2 in. crown, driven flush with gypsum board batten strips. The battens and staples are optional when the finish flooring consists of **Floor Topping Mixture***.

8. **Finishing System —** (Not Shown) — Vinyl, dry or premixed joint compound, applied in two coats to joints and screw-heads. Nom 2 in. wide paper tape embedded in first layer of compound over all joints.

*** Indicates such products shall bear the UL or cUL Certification Mark for jurisdictions employing the UL or cUL Certification (such as Canada), respectively.**

Last Updated on 2021-06-11